DWG.NO. HW0390154

*1: The flange is equipped with a cable through hole. When mounting equipment such as an attachment, ensure that no foreign liquid, oil, or dust go into hole.

*2: A bolt is mounted for T-axis grease replenished. When attaching an attachment to 100 dia.-0.035/0 part of the T-axis, enough space for the grease zerk (A-MT6X1) is required to the shape of the attachment.

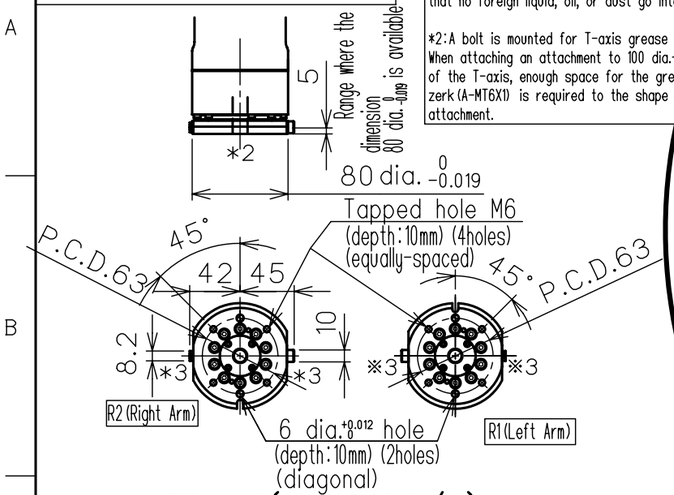

ViewA(SCALE 1/5)

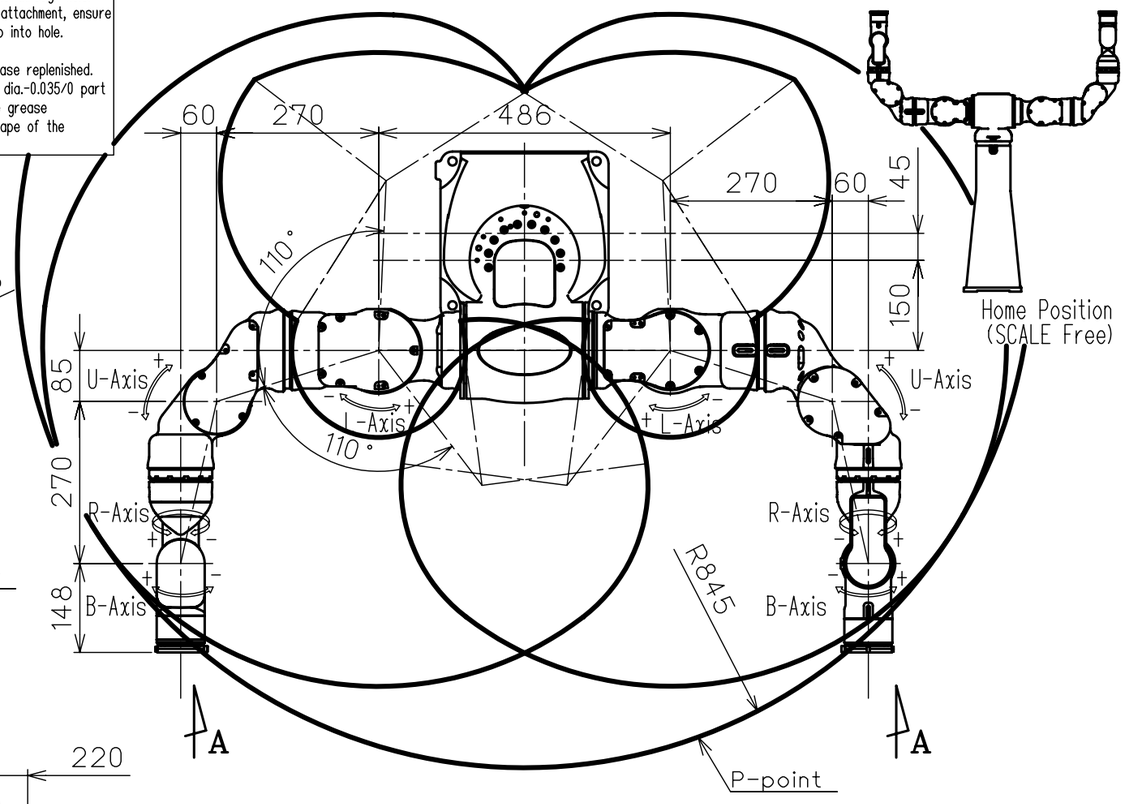

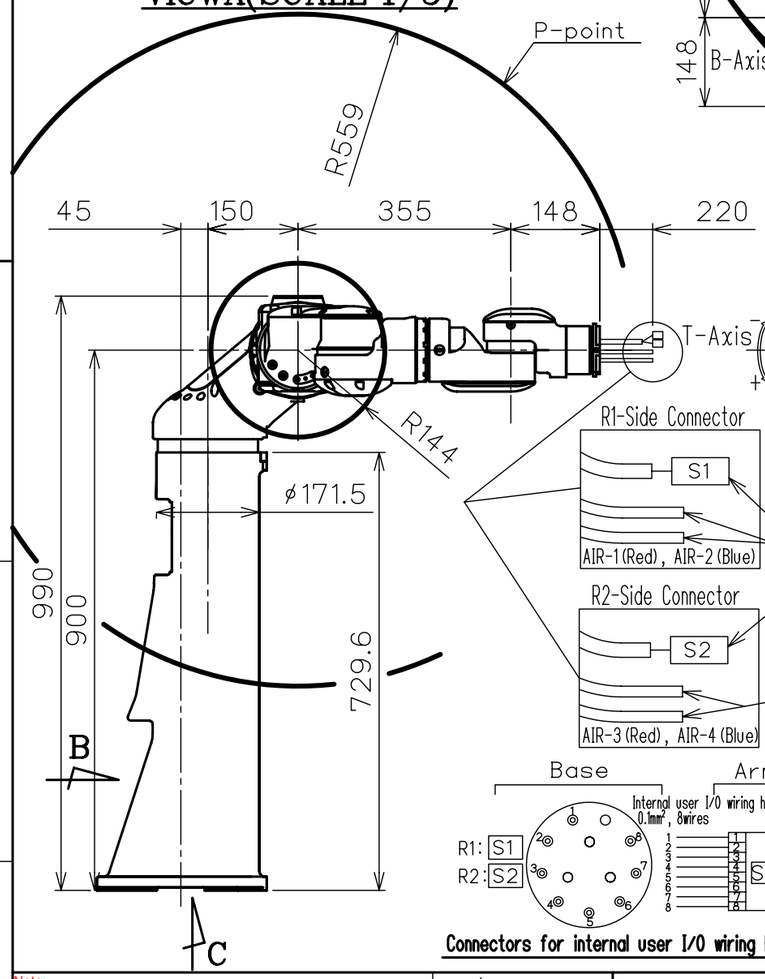

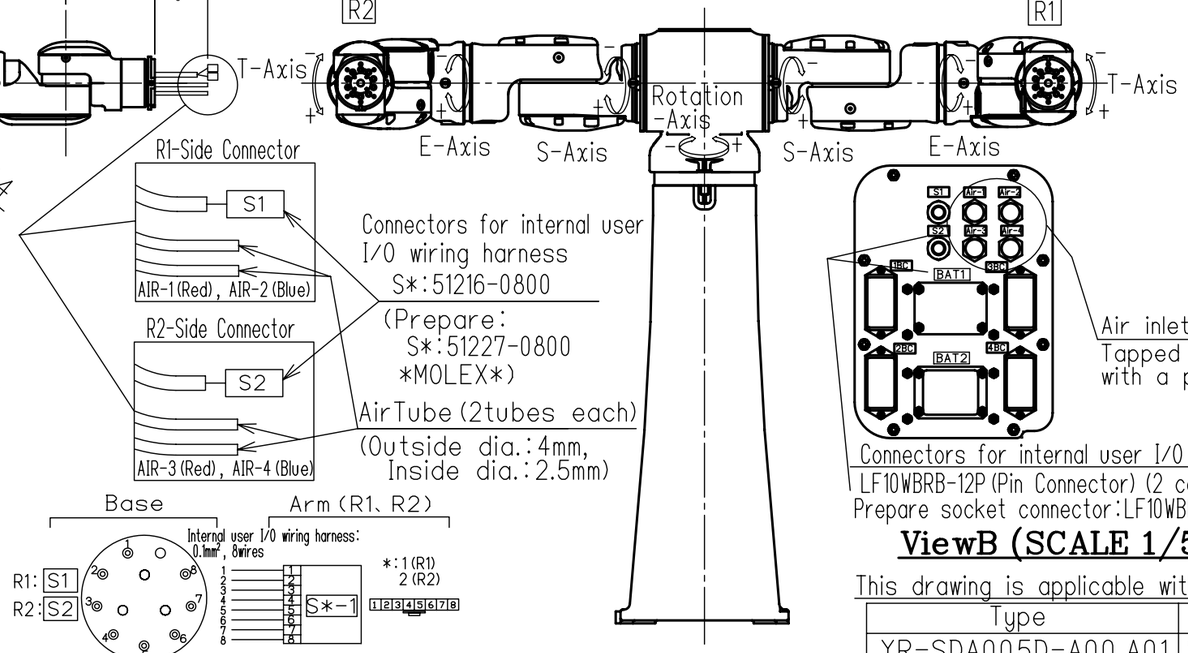

Connectors for internal user I/O wiring harness (Pin Details)

Air inlet (4 inlets):
Tapped hole PT3/8
with a pipe plug

Connectors for internal user I/O wiring harness:
LF10WBRB-12P (Pin Connector) (2 connectors)
Prepare socket connector:LF10WBP-12S *HIROSE*

ViewB (SCALE 1/5)

This drawing is applicable with following type

Type	Note
YR-SDA005D-A00,A01	Standard・DX100
YR-SDA005F-A00	Standard・FS100

Item / Model		MOTOMAN-SDA5D,SDA5F
Configuration		Articulated
Degree of Freedom		7 axes for the left arm (R1) ; 7 axes for the right arm (R2) ; 1 turning axis
Payload		5kg/arm
Repetitive Positioning Accuracy *1		±0.06mm
Range of Motion	Rotation-axis	−170° − +170°
	S-axis (lifting)	−90° − +270°
	L-axis (lower arm)	−110° − +110°
	E-axis (lower arm twist)	−170° − +170°
	U-axis (upper arm)	−90° − +115°
	R-axis (upper arm twist)	−180° − +180°
	B-axis (wrist pitch/yaw)	−110° − +110°
	T-axis (wrist twist)	−180° − +180°
Maximum Speed	Rotation-axis	3.14rad/s (180°/s)
	S-axis	3.49rad/s (200°/s)
	L-axis	3.49rad/s (200°/s)
	E-axis	3.49rad/s (200°/s)
	U-axis	3.49rad/s (200°/s)
	R-axis	3.49rad/s (200°/s)
	B-axis	4.01rad/s (230°/s)
	T-axis	6.11rad/s (350°/s)
Allowable Moment	R-axis	14.7 N・m (1.5kgf・m)
	B-axis	14.7 N・m (1.5kgf・m)
	T-axis	7.35 N・m (0.75kgf・m)
Allowable Inertia ($GD^2/4$)	R-axis	0.45 kg・m²
	B-axis	0.45 kg・m²
	T-axis	0.11 kg・m²
Mass		110 kg
Ambient Conditions	Temperature	0 − 40℃
	Humidity	20−80%RH at constant temperature
	Vibration acceleration	Less than 4.9m/s² (0.5G)
	Others	・Free from corrosive gas or liquid, or explosive gas ・Free from exposure to water,oil,or dust ・Free from excessive electrical noise (plasma)
Power Capacity	DX100	2.5 KVA
	FS100	1.5 KVA

*1: Conformed to ISO9283
SI units are used in this table. However, gravitational unit is used in ( ).

FOR STUDY PURPOSE ONLY

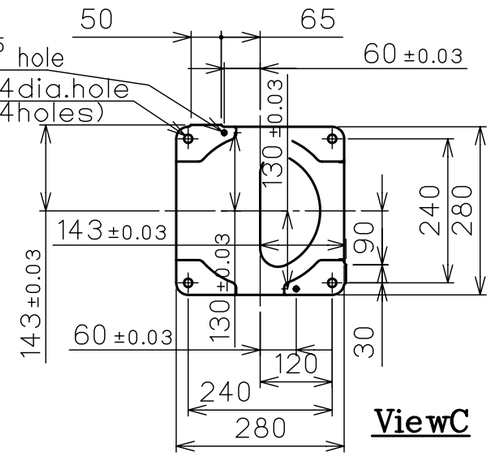

ViewC

Note:
1.All rights reserved.
2. Please note that the data is subject to be deleted without advance notice.
3. No warranty is given in relation to the data including the specification.
4. We are not responsible for any damages or loss caused by the use of the data.

SCALE 1:10

YASKAWA 株式会社 安川電機

Reference Drawing

TITLE MOTOMAN-SDA5D,SDA5F
DIMENSION DIAGRAM

DWG.NO. HW0390154 ⟨8⟩

SIZE A3